CP

CLUB POWER SERIES

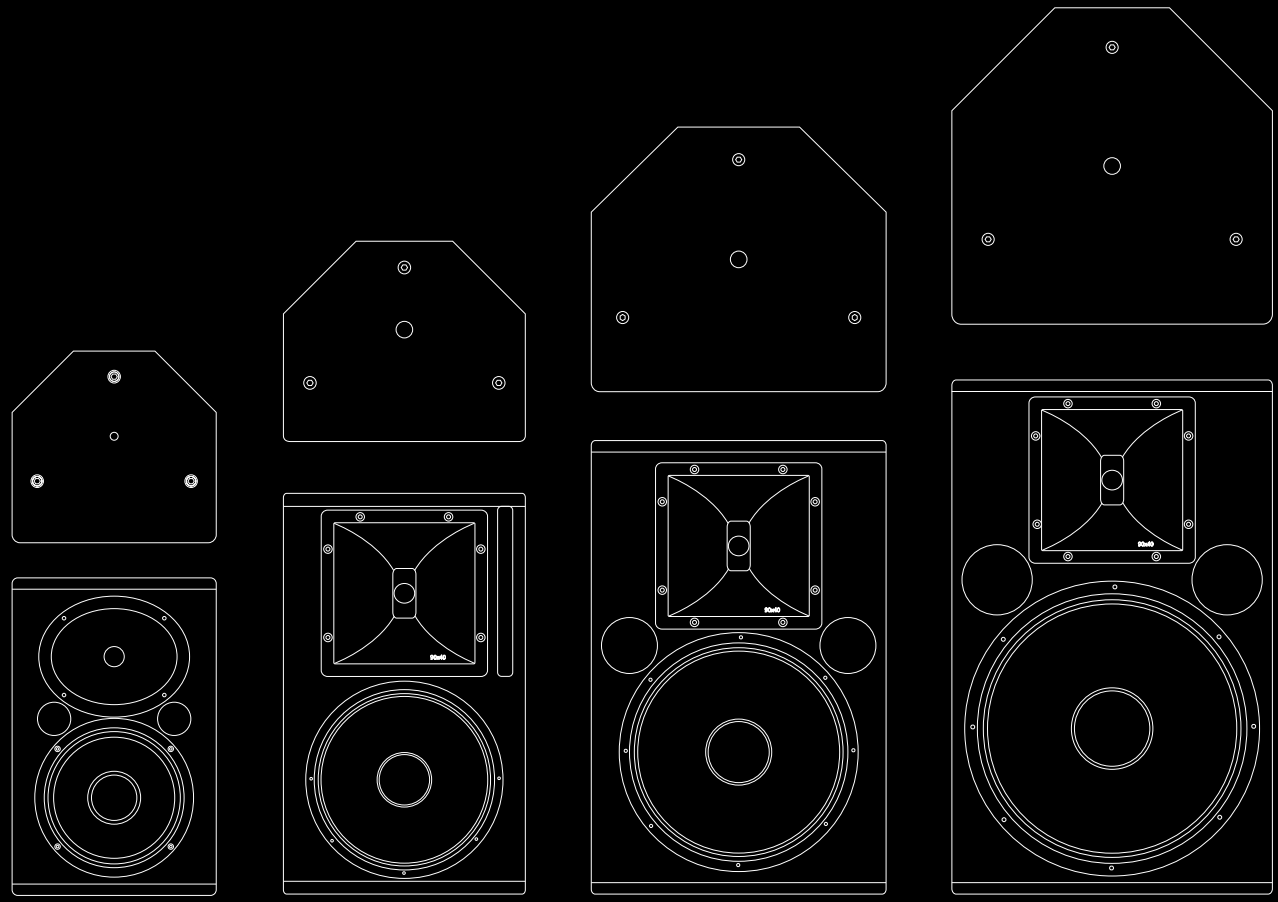

CP 8 CP 10 CP 12 CP 15

PROFESSIONAL SPEAKERS FOR LIVE & PLAYBACK MUSIC

LSS engineering

LSS engineering

CP 8

DIMENSION

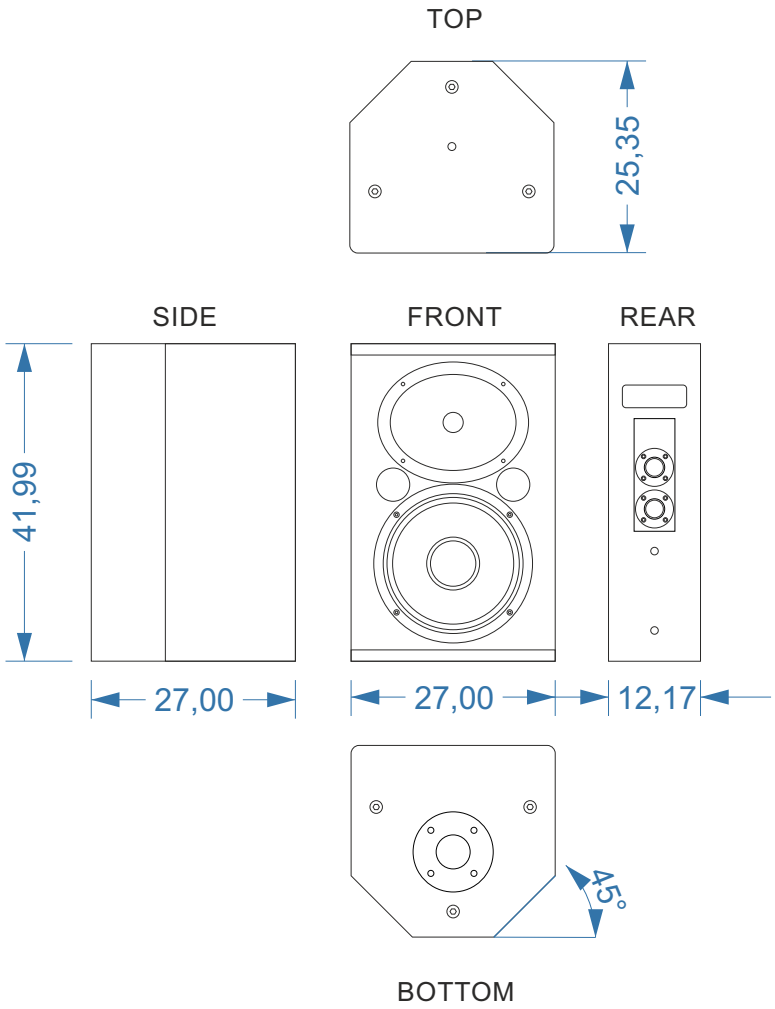

DESCRIPTION

The CP8 is a multi-function very compact loudspeaker for mobile and fixed installation applications, especially where high SPLs needed. CP8 can be used for mini PA system alone or copled with a LSS sub woofer. Possyble also to use as a floor monitor. A Ferrite 8" LF transducer and a 1" HF drive on elliptical horn 90°X 60° coverage, produce a maximum output of 124 dB SPL, the unit exceed most performance comparable devices. The extraordinary power handling capability of this system means that it can comfortably and reliably reproduce a range of program setup with very low distortion and power compression.The pilotage need only one amplifier channel the frequency splitting being accomplished by the low-loss passive filter passive crossover network inside the enclosure engineered and manufactured with top grade components, including coils with very low resistance and metalized polypropylene capacitors. It also features circuitry to protect the HF component against excessive current and voltage. The cabinet is from Baltic birch features craftsmanship protected by an epoxy powder coated, resonance-free steel grill over acoustically transparent foam. Every cabinet is coated with a high-tech black textured polwater scratch free finish and custom RAL is possible on request.The system includes mounting hardware, compatible with various separately available mounting brackets.

FACILITIES

Auditorium, concert halls, houses of worship, shopping centers, conference rooms, sport facilities, retail stores, industrial, commercial and leisure projects, pubs, bars and cafes, small theatrical installations, schools malls hotels.

APPLICATIONS

Mini PA System, Foreground Music Systems, Background Music Systems, Paging Systems, Delay and Stage front fill, Floor monitor system.

PERFORMANCE

Frequency Response -10 dB 60 Hz – 20 kHz
Nominal Dispersion 90° x 60° (H x V)
Impedance (Nom) 8 Ω
Watts AES Continous 200 W/Peak 450 W
Maximum SPL Output calculated 126dB SPL

PHYSICAL

Component Low 8" woofer
Component High 1" diaphragm compression driver
Loading Low Bass-reflex
Loading High 1" Elliptical Horn
Connectors 2 x NL4 PAR Pins 1+/1-
Cabinet Material Baltic birch plywood
Cabinet Finish Black polywater coating
Grill Epoxy powder coated
Installation Points 8 x M6
Pole Mount 35 mm socket
Height 420 mm
Width 270mm
Depth 253mm
Weight 10.5kg

LSS engineering

CP 10

DESCRIPTION

The CP10 is a multi-function very compact loudspeaker for mobile and fixed installation applications, especially where high SPLs needed. CP10 can be used for mini PA system alone or copled with a LSS sub woofer. Possyble also to use as a floor monitor. A Ferrite 10” LF transducer and a 1.5” HF driver on rotable horn produce a maximum output of 126 dB SPL, the unit exceed most performance comparable devices. The extraordinary power handling capability of this system means that it can comfortably and reliably reproduce a range of program setup with very low distortion and power compression.The pilotage need only one amplifier channel the frequency splitting being accomplished by the low-loss passive filter passive crossover network inside the enclosure engineered and manufactured with top grade components, including coils with very low resistance and metalized polypropylene capacitors. It also features circuitry to protect the HF component against excessive current and voltage. The cabinet is from Baltic birch features craftsmanship protected by an epoxy powder coated, resonance-free steel grill over acoustically transparent foam. Every cabinet is coated with a high-tech black textured polwater scratch free finish and custom RAL is possible on request.The system includes mounting hardware, compatible with various separately available mounting brackets.

FACILITIES

Auditorium, concert halls, houses of worship, shopping centers, conference rooms, sport facilities, retail stores, industrial, commercial and leisure projects, pubs, bars and cafes, small theatrical installations, schools malls hotels.

APPLICATIONS

Mini PA System, Foreground Music Systems, Background Music Systems, Paging Systems, Delay and Stage front fill, Floor monitor system.

DIMENSION

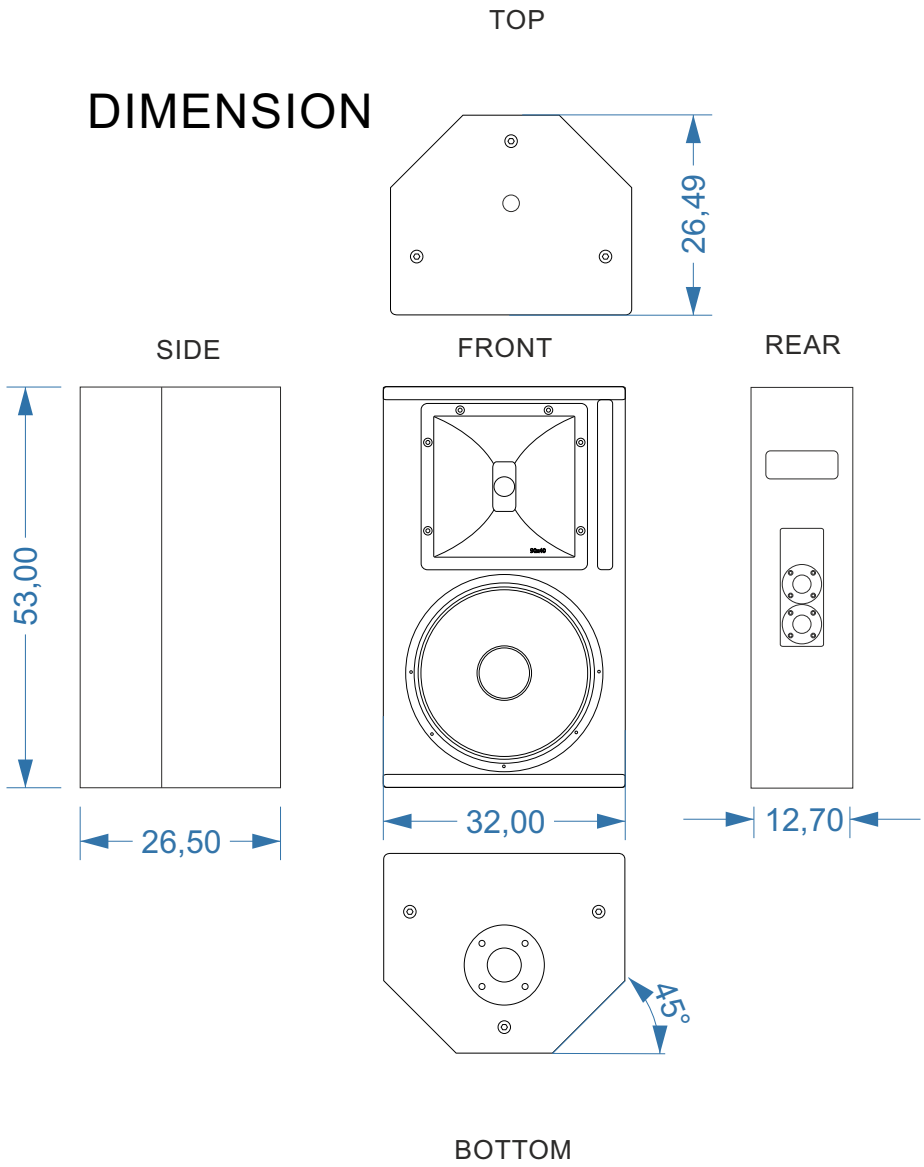

PERFORMANCE

Frequency Response -10 dB 50 Hz – 20 kHz
Nominal Dispersion 90° x 40° (H x V)
Impedance (Nom) 8 Ω
Watts AES Continous 300 W/Peak 850 W
Maximum SPL Output calculated 126dB SPL

PHYSICAL

Component Low 10” woofer
Component High 1.5” diaphragm compression driver
Loading Low Bass-reflex
Loading High 1” Rotable Horn
Connectors 2 x NL4 PAR Pins 1+/1-
Cabinet Material Baltic birch plywood
Cabinet Finish Black polywater coating
Grill Epoxy powder coated
Installation Points 8 x M6
Pole Mount 35 mm socket
Height 530 mm
Width 330mm
Depth 307mm
Weight 15kg

LSS engineering

CP 12

DIMENSION

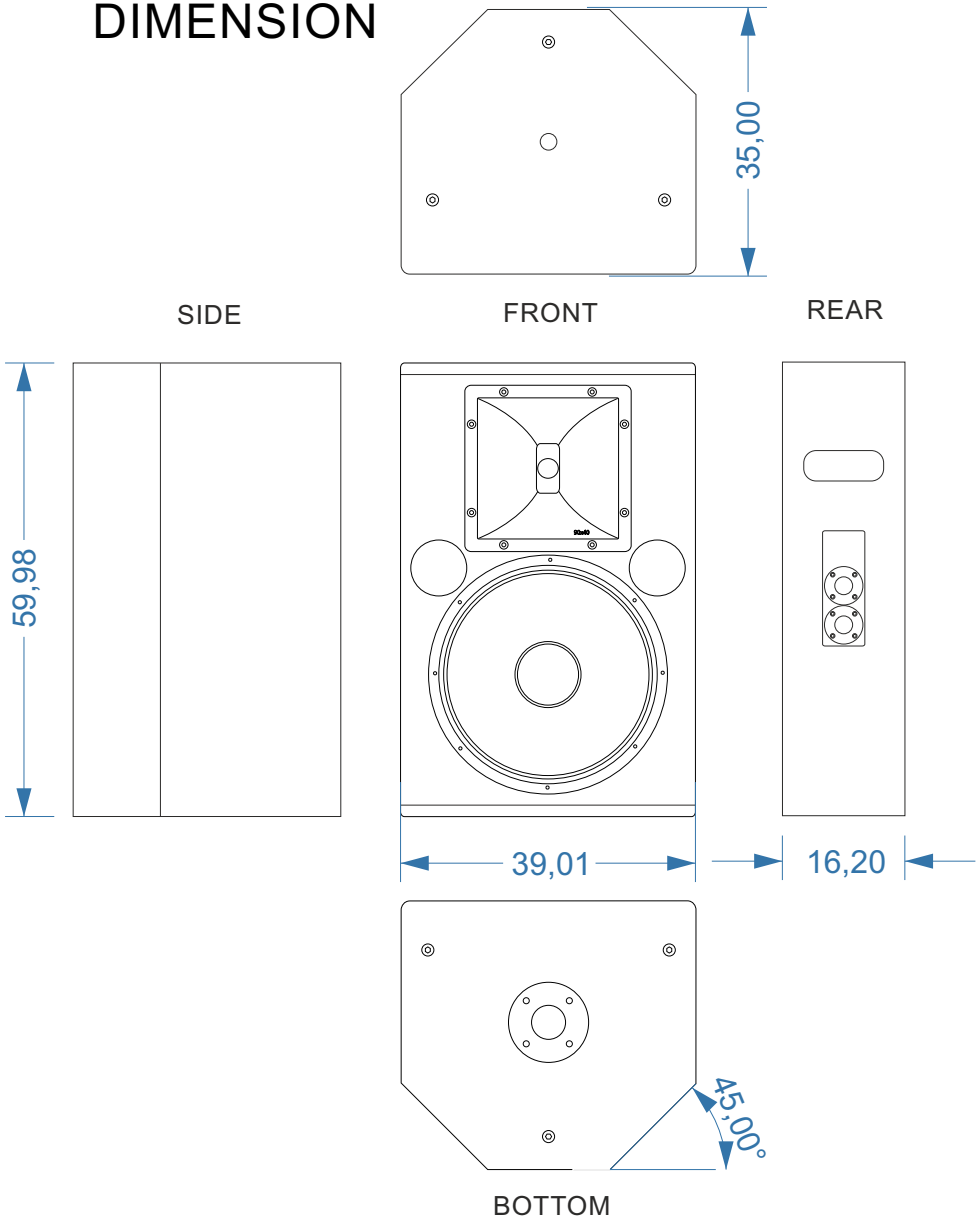

DESCRIPTION

The CP12 is a multi-function loudspeaker very compact for mobile and fixed installation applications, especially where high SPLs needed. A 12" LF transducer and a 1.5" HF driver on rotable horn produce a maximum output of 128 dB SPL. The system will comfortably exceeds most comparable devices performance. The extraordinary power handling capability of this system means that it can comfortably and reliably reproduce a range of program setup with very low distortion and power compression. CP12 is ideally for main PA sytem alone or copled with a LSS sub woofer. Possyble also to use as a floor monitor.
The pilotage need only one amplifier channel, the frequency splitting being accomplished by the low-loss passive filter passive crossover network inside the enclosure engineered and manufactured with top grade components, including coils with very low resistance and metalized polypropylene capacitors. It also features circuitry to protect the HF component against excessive current and voltage. The cabinet is from Baltic birch features craftsmanship protected by an epoxy powder coated, resonance-free steel grill over acoustically transparent foam. Every cabinet is coated with a high-tech black textured polwater scratch free finish and custom RAL is possible on request. The system includes mounting hardware, compatible with various separately available mounting brackets.

FACILITIES

Auditorium, concert halls, houses of worship, shopping centers, conference rooms, sport facilities, retail stores, industrial, commercial and leisure projects, pubs, bars and cafes, small theatrical installations, schools malls hotels.

APPLICATIONS

Main PA Systems, Monitor System, Delay and Stage fill.

PERFORMANCE

Frequency Response -10 dB 60 Hz – 22 kHz
Nominal Dispersion 90° x 40° (H x V)
Impedance (Nom) 8 Ω
Watts AES Continous 380 W/Peak 1075 W
Maximum SPL Output calculated 128 dB SPL

PHYSICAL

Component Low 12" woofer
Component High 1.5" diaphragm compression driver
Loading Low Bass-reflex
Loading High 1" Rotable Horn
Connectors 2 x NL4 PAR Pins 1+/1-
Cabinet Material Baltic birch plywood
Cabinet Finish Black polywater coating
Grill Epoxy powder coated
Installation Points 8 x M8
Pole Mount 35 mm socket
Height 600 mm
Width 390mm
Depth 354 mm
Weight 19 kg

LSS engineering

CP 15

DIMENSION

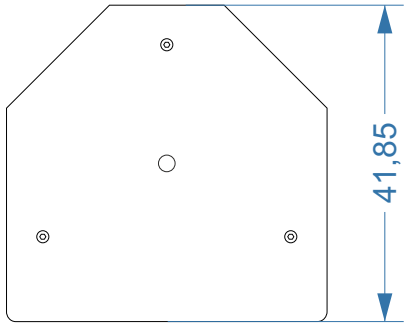

SIDE

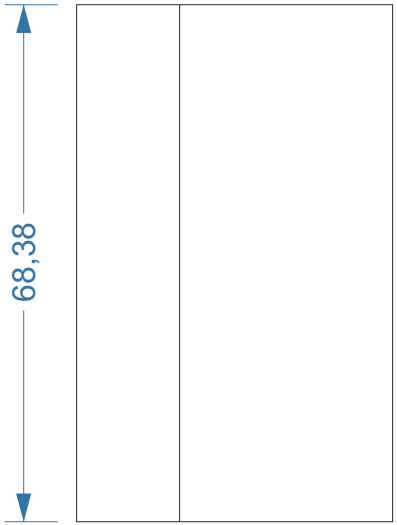

FRONT

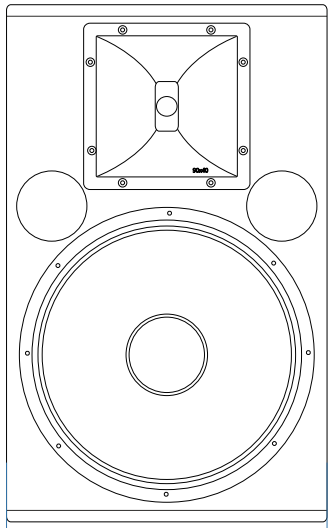

REAR

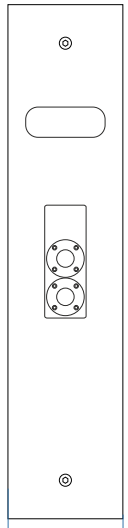



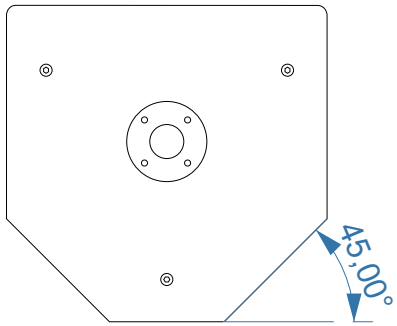

BOTTOM

DESCRIPTION

The CP15 is a multi-function compact loudspeaker for mobile and fixed installation applications, especially where high SPL is needed. CP15 can be used for main PA system or as a floor monitor. A 15” LF Ferrite transducer and a 1,5” compression driver on rotable horn produces a maximum output of 130 dB SPL. The extraordinary power handling capability of this system means that it can comfortably and reliably reproduce a range of program setups with very low distortion and power compression. The pilotage need only one amplifier channel , the frequency splitting being accomplished by the low-loss passive filter passive crossover network inside the enclosure engineered manufactured with top grade components, including coils with very low resistance and metalized polypropylene capacitors. It also features circuitry to protect the HF component against excessive current and voltage. The cabinet is from Baltic birch features craftsmanship protected by an epoxy powder coated, resonance-free steel grill over acoustically transparent foam. Every cabinet is coated with a high-tech black textured polywater scratch free finish and custom RAL is possible on request. The system includes mounting hardware, compatible with various separately available mounting brackets.

FACILITIES

Auditorium, concert halls, houses of worship, shopping centers, conference rooms, sport facilities, retail stores, industrial, commercial and leisure projects, pubs, bars and cafes, small theatrical installations, schools malls hotels.

APPLICATIONS

Main PA Systems, Monitor System, Delay and Stage fill.

PERFORMANCE

Frequency Response -10 dB 45 Hz – 20 kHz
Nominal Dispersion 90° x 40° (H x V)
Impedance (Nom) 8 Ω
Watts AES Continous 550 W/Peak 1700 W
Maximum SPL Output calculated 130 dB SPL

PHYSICAL

Component Low 15” woofer
Component High 1.5” diaphragm compression driver
Loading Low Bass-reflex
Loading High 1" Rotable Horn
Connectors 2x NL4 PAR Pins 1+/1-
Cabinet Material Baltic birch plywood
Cabinet Finish Black polywater coating
Grill Epoxy powder coated
Installation Points 8 X M8
Pole Mount 35 mm socket
Height 684 mm
Width 423mm
Depth 418 mm
Weight 25 kg

CP

CLUB POWER SERIES

LSS engineering

LSS Viale degli Artigiani - 89024 Polistena (RC) ITALY Tel. (39) 966 932199 Email: info@lss.it - www.lss.it