CP

CLUB POWER SERIES

User Manual

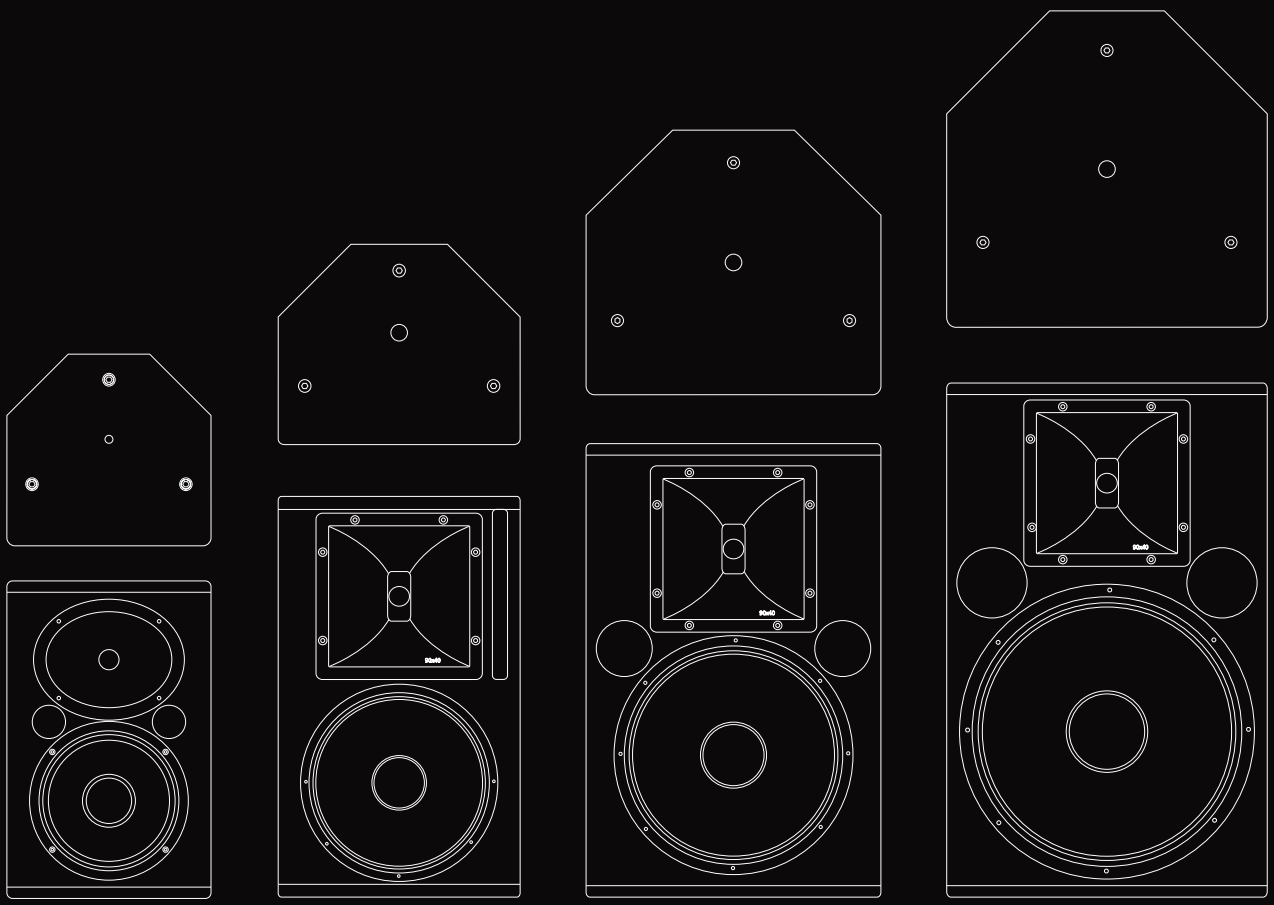

CP 8 CP 10 CP 12 CP 15

PROFESSIONAL SPEAKERS FOR LIVE & PLAYBACK MUSIC

LSS engineering

Content

Introduction.....3

CP series overview.....4

CP8.....5

CP10.....6

CP12.....7

CP15.....8

Accessories.....9

Safety first.....10

Amplification.....11

Connections.....12

Frequency Response.....13

Warranty.....14

General information
CP SERIES Manual
Version: 1.0 Polistena March 6 2023
Copyright © 2023 by LSS Advanced Speakers System; all rights reserved.
Keep this document with the product or in a safe place so that it is available for future reference.
We recommend you to regularly check the LSS.it website for the latest version of this document.
If you require additional documents for this purpose, you can order them from LSS.
LSS Advanced Speakers Systems, viale degli Artigiani Zona PIP 89024 Polistena (RC) Italy

Introduction

Thank you for purchasing an LSS Club Power Series system. The Club Power Series is a range of high-performance, loudspeaker enclosures specifically engineered for the demanding environment of clubs and live events. These systems are designed to deliver powerful, clear sound reinforcement in a compact, rugged package suitable for fixed installations. This user's guide covers the Club Power Series models offered by LSS, which are designed for flexible operation with inside a specially crossover network to optimize sound quality for various applications.

Unpacking and Inspection

Before using your CP Series speaker, please take a moment to inspect the package carefully upon delivery. At LSS, every unit is meticulously checked and tested in our facility to ensure it meets our high standards of quality. Once the product leaves our factory, however, it is packaged with the appropriate protective materials for transit.

Please note that any damage incurred during shipping is not the responsibility of LSS. We strongly recommend that you inspect all components of the package immediately after opening. If you find any damage or missing items, please contact your distributor right away to report the issue.

By checking the package contents at the time of receipt, you help ensure that your product has arrived in perfect condition and can perform at its best.

Cabinet Option

Cabinet options
The custom color (CC) version of the cabinet is available in all colors of the RAL color table. The respective openings of the cabinet are covered by plates in cabinet color. The connector type is NL4.

CP Series overview

The CP series is a multi-function very compact loudspeaker for mobile and fixed installation applications, especially where high SPLs needed.

CP 8	Component Low 8” woofer Component High 1” diaphragm compression driver Loading Low Bass-reflex Loading High 1” Eliptical Horn 90°X60°
CP 10	Component Low 10” woofer Component High 1.5” diaphragm compression driver Loading Low Bass-reflex Loading High 1” Rotable Horn 90°X40°
CP 12	Component Low 12” woofer Component High 1.5” diaphragm compression driver Loading Low Bass-reflex Loading High 1” Rotable Horn 90°X40°
CP 12	Component Low 15” woofer Component High 1.5” diaphragm compression driver Loading Low Bass-reflex Loading High 1” Rotable Horn 90°X40°



CP 8 DIMENSION

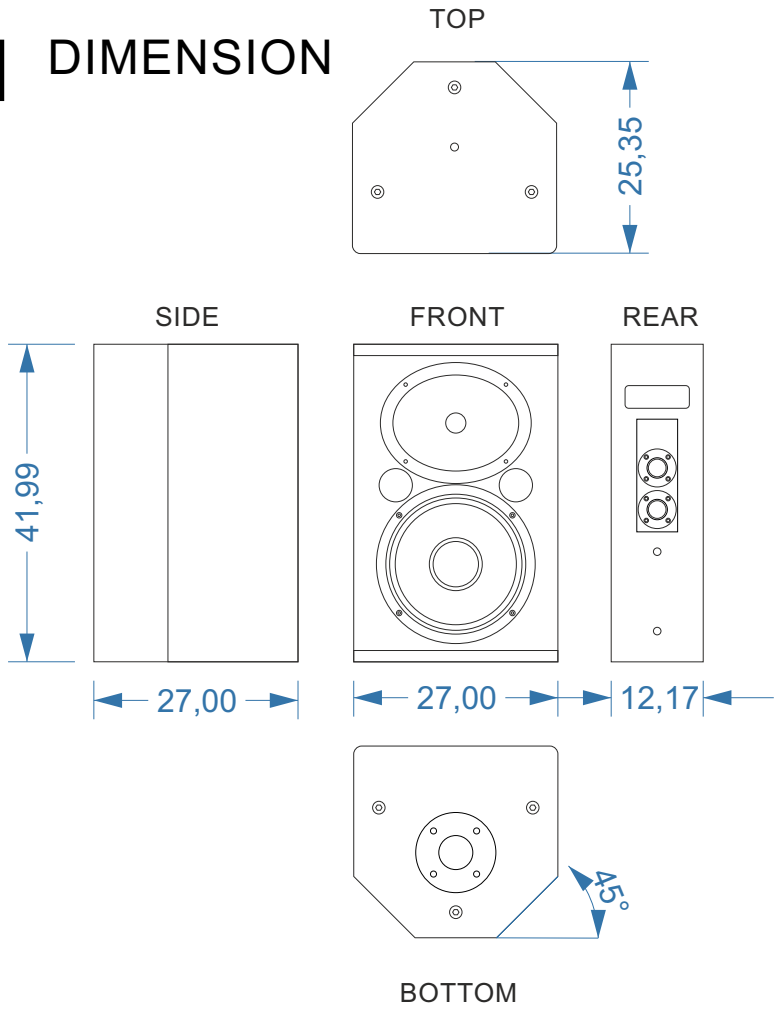

DESCRIPTION

The CP8 is a multi-function very compact loudspeaker for mobile and fixed installation applications, especially where high SPLs needed. CP8 can be used for mini PA system alone or copled with a LSS sub woofer. Possyble also to use as a floor monitor. A Ferrite 8" LF transducer and a 1" HF driver on elliptical horn 90°X 60° coverage, produce a maximum output of 124 dB SPL, the unit exceed most performance comparable devices. The extraordinary power handling capability of this system means that it can comfortably and reliably reproduce a range of program setup with very low distortion and power compression.The pilotage need only one amplifier channel the frequency splitting being accomplished by the low-loss passive filter passive crossover network inside the enclosure engineered and manufactured with top grade components, including coils with very low resistance and metalized polypropylene capacitors. It also features circuitry to protect the HF component against excessive current and voltage. The cabinet is from Baltic birch features craftsmanship protected by an epoxy powder coated, resonance-free steel grill over acoustically transparent foam. Every cabinet is coated with a high-tech black textured polwater scratch free finish and custom RAL is possible on request.The system includes mounting hardware, compatible with various separately available mounting brackets.

FACILITIES

Auditorium, concert halls, houses of worship, shopping centers, conference rooms, sport facilities, retail stores, industrial, commercial and leisure projects, pubs, bars and cafes, small theatrical installations, schools malls hotels.

APPLICATIONS

Mini PA System, Foreground Music Systems, Background Music Systems, Paging Systems, Delay and Stage front fill, Floor monitor system.

PERFORMANCE

Frequency Response -10 dB 60 Hz – 20 kHz
Nominal Dispersion 90° x 60° (H x V)
Impedance (Nom) 8 Ω
Watts AES Continous 200 W/Peak 450 W
Maximum SPL Output calculated 126dB SPL

PHYSICAL

Component Low 8" woofer
Component High 1" diaphragm compression driver
Loading Low Bass-reflex
Loading High 1" Elliptical Horn
Connectors 2 x NL4 PAR Pins 1+/1-
Cabinet Material Baltic birch plywood
Cabinet Finish Black polywater coating
Grill Epoxy powder coated
Installation Points 8 x M6
Pole Mount 35 mm socket
Height 420 mm
Width 270mm
Depth 253mm
Weight 10.5kg

CP 10 DIMENSION

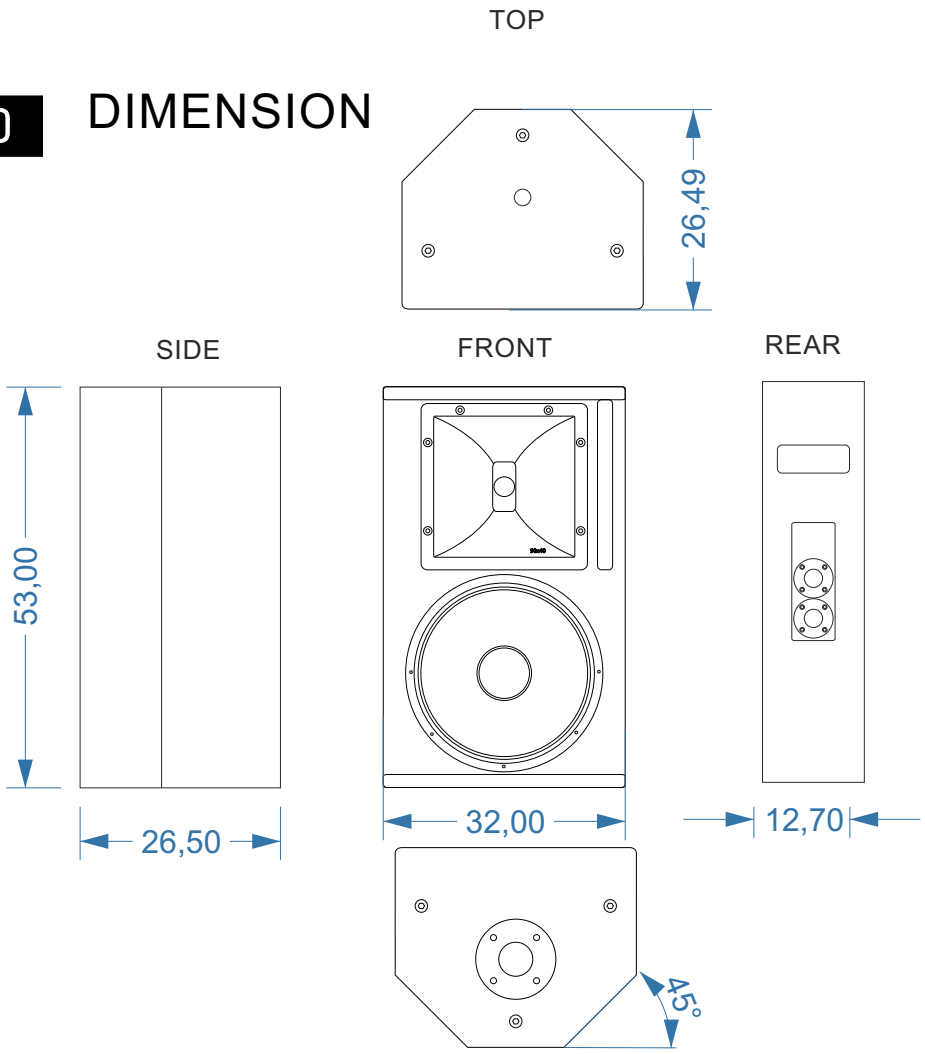

DESCRIPTION

The CP10 is a multi-function very compact loudspeaker for mobile and fixed installation applications, especially where high SPLs needed. CP10 can be used for mini PA system alone or copled with a LSS sub woofer. Possyble also to use as a floor monitor. A Ferrite 10" LF transducer and a 1.5" HF driver on rotable horn produce a maximum output of 126 dB SPL, the unit exceed most performance comparable devices. The extraordinary power handling capability of this system means that it can comfortably and reliably reproduce a range of program setup with very low distortion and power compression.The pilotage need only one amplifier channel the frequency splitting being accomplished by the low-loss passive filter passive crossover network inside the enclosure engineered and manufactured with top grade components, including coils with very low resistance and metalized polypropylene capacitors. It also features circuitry to protect the HF component against excessive current and voltage. The cabinet is from Baltic birch features craftsmanship protected by an epoxy powder coated, resonance-free steel grill over acoustically transparent foam. Every cabinet is coated with a high-tech black textured polwater scratch free finish and custom RAL is possible on request.The system includes mounting hardware, compatible with various separately available mounting brackets.

FACILITIES

Auditorium, concert halls, houses of worship, shopping centers, conference rooms, sport facilities, retail stores, industrial, commercial and leisure projects, pubs, bars and cafes, small theatrical installations, schools malls hotels.

APPLICATIONS

Mini PA System, Foreground Music Systems, Background Music Systems, Paging Systems, Delay and Stage front fill, Floor monitor system.

PERFORMANCE

Frequency Response -10 dB 50 Hz – 20 kHz
Nominal Dispersion 90° x 60° (H x V)
Impedance (Nom) 8 Ω
Watts AES Continous 300 W/Peak 850 W
Maximum SPL Output calculated 126dB SPL

PHYSICAL

Component Low 10" woofer
Component High 1.5" diaphragm compression driver
Loading Low Bass-reflex
Loading High 1" Rotable Horn
Connectors 2 x NL4 PAR Pins 1+/1-
Cabinet Material Baltic birch plywood
Cabinet Finish Black polywater coating
Grill Epoxy powder coated
Installation Points 8 x M6
Pole Mount 35 mm socket
Height 530 mm
Width 330mm
Depth 307mm
Weight 15kg

DIMENSION

CP 12

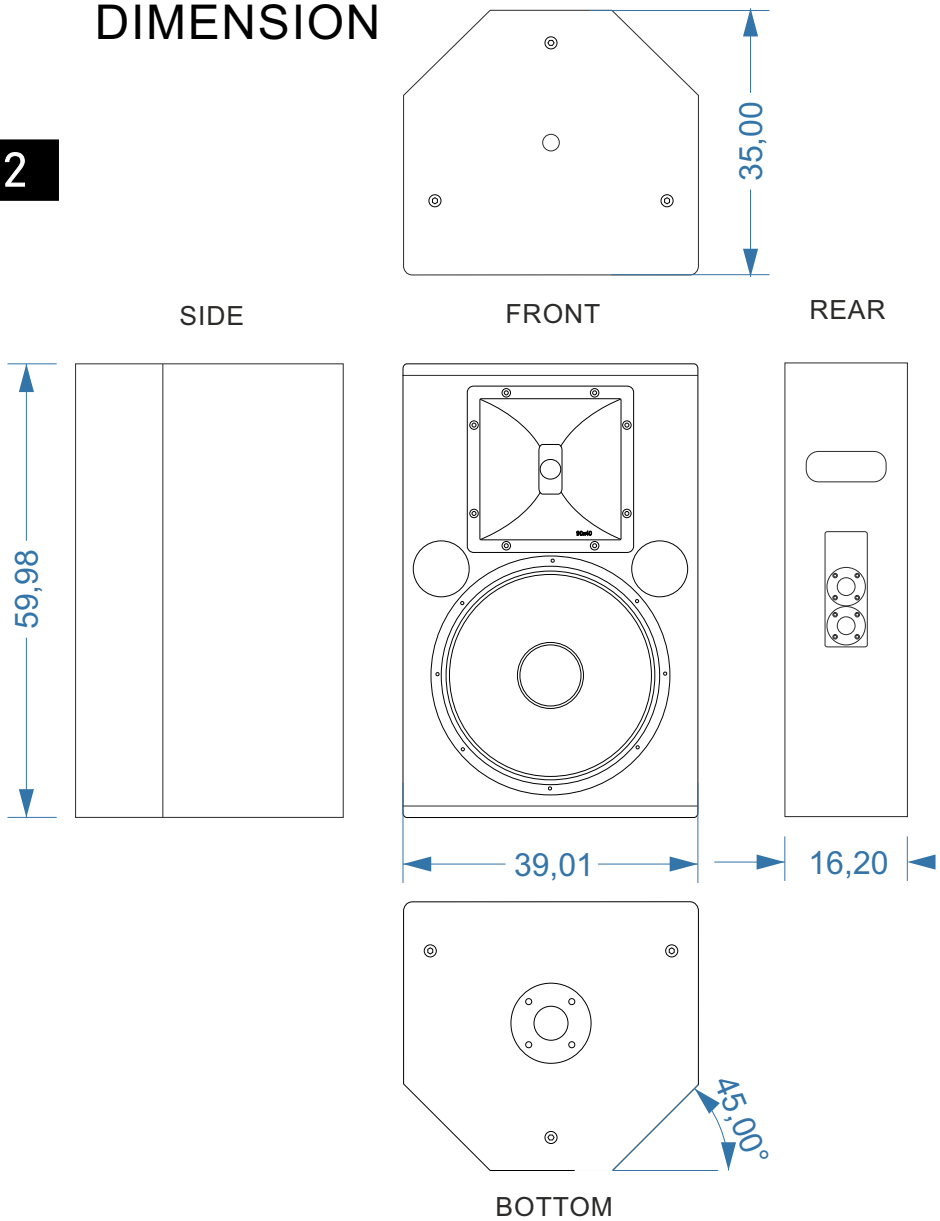

DESCRIPTION

The CP12 is a multi-function loudspeaker very compact for mobile and fixed installation applications, especially where high SPLs needed. A 12" LF transducer and a 1.5" HF driver on rotable horn produce a maximum output of 128 dB SPL. The system will comfortably exceeds most comparable devices performance. The extraordinary power handling capability of this system means that it can comfortably and reliably reproduce a range of program setup with very low distortion and power compression. CP12 is ideally for main PA sytem alone or copled with a LSS sub woofer. Possyble also to use as a floor monitor.

The pilotage need only one amplifier channel, the frequency splitting being accomplished by the low-loss passive filter passive crossover network inside the enclosure engineered and manufactured with top grade components, including coils with very low resistance and metalized polypropylene capacitors. It also features circuitry to protect the HF component against excessive current and voltage. The cabinet is from Baltic birch features craftsmanship protected by an epoxy powder coated, resonance-free steel grill over acoustically transparent foam. Every cabinet is coated with a high-tech black textured polwater scratch free finish and custom RAL is possible on request. The system includes mounting hardware, compatible with various separately available mounting brackets.

FACILITIES

Auditorium, concert halls, houses of worship, shopping centers, conference rooms, sport facilities, retail stores, industrial, commercial and leisure projects, pubs, bars and cafes, small theatrical installations, schools malls hotels.

APPLICATIONS

Main PA Systems, Monitor System, Delay and Stage fill.

PERFORMANCE

Frequency Response -10 dB 60 Hz – 22 kHz
Nominal Dispersion 90° x 40° (H x V)
Impedance (Nom) 8 Ω
Watts AES Continous 380 W/Peak 1075 W
Maximum SPL Output calculated 128 dB SPL

PHYSICAL

Component Low 12" woofer
Component High 1.5" diaphragm compression driver
Loading Low Bass-reflex
Loading High 1" Rotable Horn
Connectors 2 x NL4 PAR Pins 1+/1-
Cabinet Material Baltic birch plywood
Cabinet Finish Black polywater coating
Grill Epoxy powder coated
Installation Points 8 x M8
Pole Mount 35 mm socket
Height 600 mm
Width 390mm
Depth 354 mm
Weight 19 kg

DIMENSION

CP 15

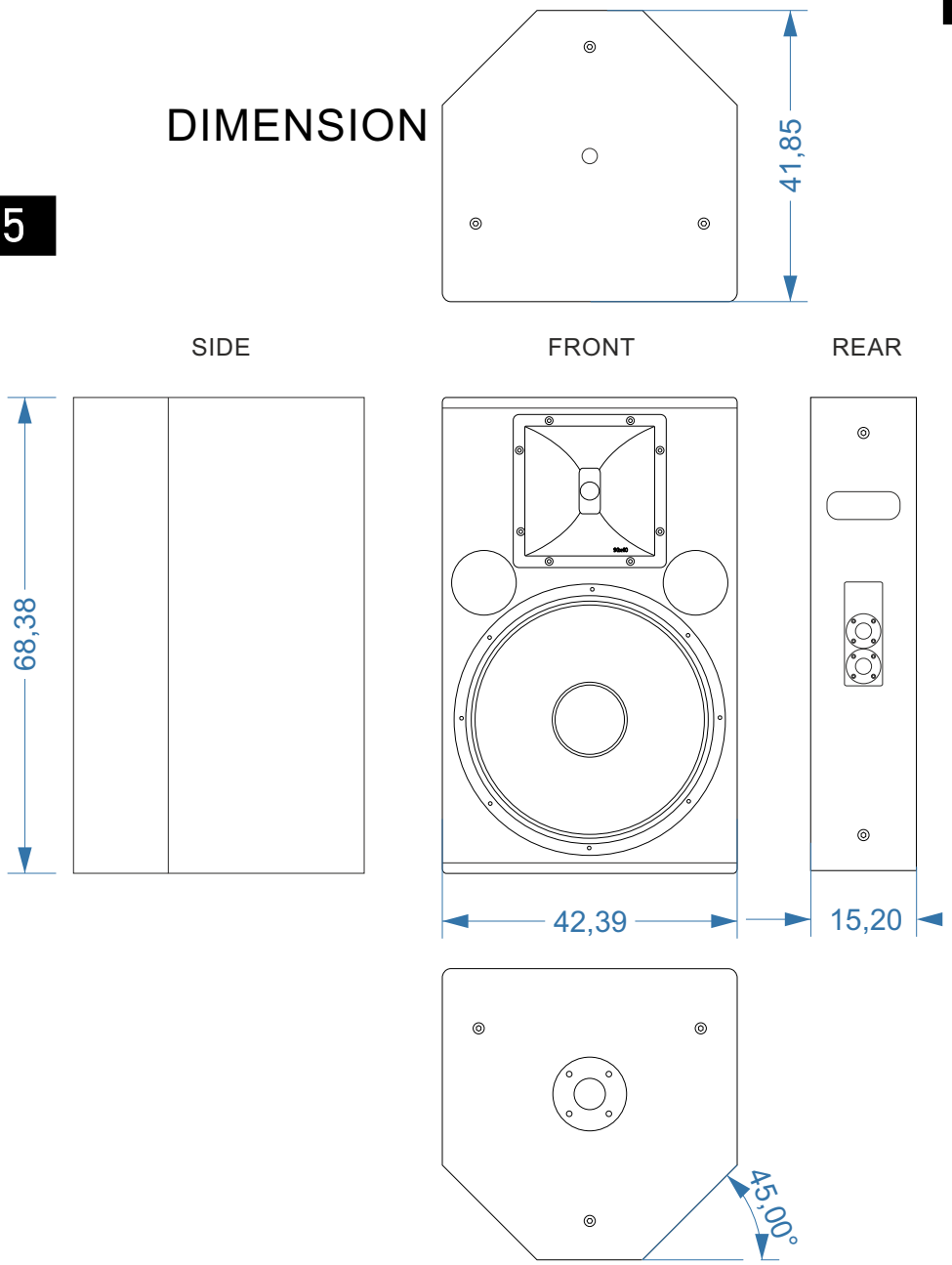

DESCRIPTION

The CP15 is a multi-function compact loudspeaker for mobile and fixed installation applications, especially where high SPL is needed. CP15 can be used for main PA system or as a floor monitor.
A 15" LF Ferrite transducer and a 1,5" compression driver on rotable horn produces a maximum output of 130 dB SPL. The extraordinary power handling capability of this system means that it can comfortably and reliably reproduce a range of program setups with very low distortion and power compression. The pilotage need only one amplifier channel , the frequency splitting being accomplished by the low-loss passive filter passive crossover network inside the enclosure engineered manufactured with top grade components, including coils with very low resistance and metalized polypropylene capacitors. It also features circuitry to protect the HF component against excessive current and voltage. The cabinet is from Baltic birch features craftsmanship protected by an epoxy powder coated, resonance-free steel grill over acoustically transparent foam. Every cabinet is coated with a high-tech black textured polywater scratch free finish and custom RAL is possible on request. The system includes mounting hardware, compatible with various separately available mounting brackets.

FACILITIES

Auditorium, concert halls, houses of worship, shopping centers, conference rooms, sport facilities, retail stores, industrial, commercial and leisure projects, pubs, bars and cafes, small theatrical installations, schools malls hotels.

APPLICATIONS

Main PA Systems, Monitor System, Delay and Stage fill.

PERFORMANCE

Frequency Response -10 dB 45 Hz – 20 kHz
Nominal Dispersion 90° x 40° (H x V)
Impedance (Nom) 8 Ω
Watts AES Continous 550 W/Peak 1700 W
Maximum SPL Output calculated 130 dB SPL

PHYSICAL

Component Low 15" woofer
Component High 1.5" diaphragm compression driver
Loading Low Bass-reflex
Loading High 1" Rotable Horn
Connectors 2x NL4 PAR Pins 1+/1-
Cabinet Material Baltic birch plywood
Cabinet Finish Black polywater coating
Grill Epoxy powder coated
Installation Points 8 X M8
Pole Mount 35 mm socket
Height 684 mm
Width 423mm
Depth 418 mm
Weight 25 kg

Accessories

LSS CP Series speakers are designed with precision-engineered threaded inserts for flown applications in fixed installations. Each cabinet comes equipped with six M10 inserts that allow you to attach custom flying hardware or mount using eye bolts. It is essential that these fittings are made from either forged steel or machined, shouldered types that are certified to safely support loads greater than the cabinet's weight. Do not opt for inexpensive, DIY-grade formed steel inserts, as these do not provide the necessary safety for suspending heavy speaker cabinets.
The CP Series speakers can also be installed horizontally with the special UG/UP brackets supplied on request by LSS.

Eye Bolts

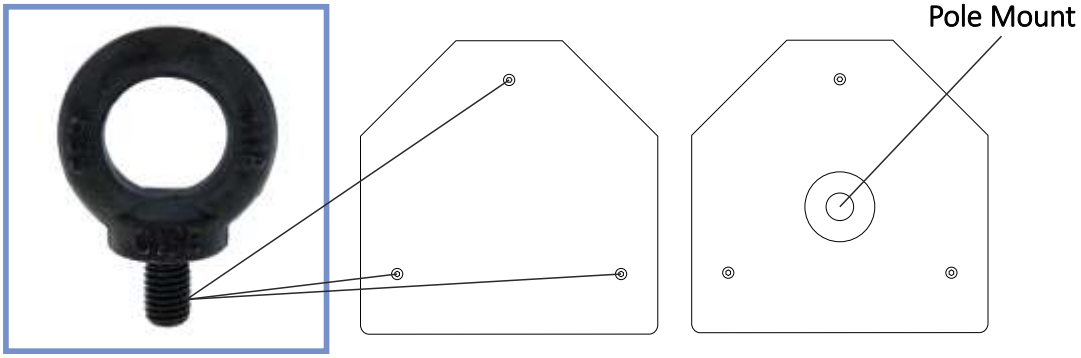

Pole Mount

Staffa UG/UP

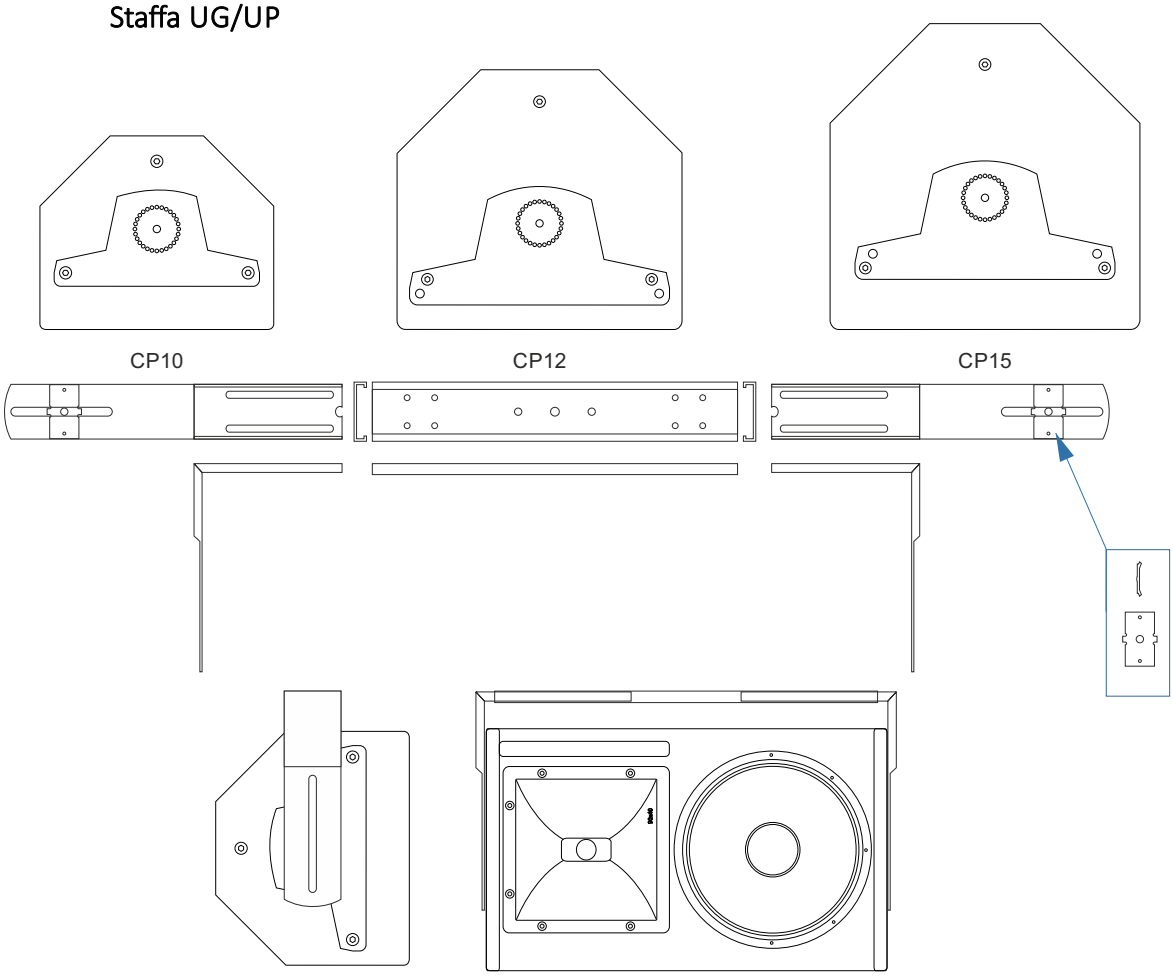

Safety first

The use of professional audio systems requires attention and awareness to ensure maximum safety. Please read the following guidelines carefully for the safe use of CP Series speakers.

Sound Levels and Hearing Protection

CP Series speakers can generate high sound pressure levels, so it is important to use them with caution. Prolonged exposure to levels above 90 dB can cause hearing damage, which accumulates over time. Avoid standing too close to the speakers when they are operating at high volumes to prevent any risk.

Stacking

Stability and Positioning

- Always ensure that the surface where you place the speakers is stable and sturdy.
- When used outdoors, consider wind as a potential risk factor and ensure that the stacking is secure.
- High-power speakers may experience slight vibrations and shifts during use. To prevent unwanted movement, use anti-slip materials between the speakers and the floor or secure them with safety straps.

Rigging and suspension

Warning: Suspended mounting must only be performed by qualified personnel, following strict safety procedures. All mounting points must be securely anchored to an appropriate structure. If in doubt, consult industry experts such as structural engineers or specialized technicians.

CP Series speakers are designed for versatile installation. Each unit is equipped with threaded mounting points for use with dedicated accessories. However:

- It is not permitted to suspend one speaker directly from another.
- Only forged or machined steel shoulder eye bolts with a thread length of at least 30 mm must be used for anchoring.
- Low-quality eye bolts, made by simply bending a metal rod, do not provide the necessary safety and must not be used.
- An inclined installation creates forces that are not aligned with the thread axis. It is therefore essential to use certified equipment capable of withstanding such stresses.

By following these guidelines, you can ensure maximum safety when using your CP Series speakers, protecting both people and equipment.

Amplification

HOW TO CHOOSE THE RIGHT AMPLIFIER FOR YOUR SPEAKERS

Choosing the right amplifier is essential to get the best performance from the Club Power Series speakers by LSS. An unsuitable amplifier can compromise sound quality and shorten the system's lifespan. Here are the key factors to consider:

1. POWER: MATCHING AMPLIFIER AND SPEAKER

The amplifier must provide the right amount of power to drive the speakers without causing distortion or damage.

- **Recommended Power:**
- To ensure optimal performance and good dynamic headroom, the amplifier should deliver 1.5 to 2 times the RMS power rating of the speaker.
- Example: If a speaker has a 500W RMS rating, the amplifier should provide between 750W and 1000W per channel.
- **Why not use an underpowered amplifier?**
- A weak amplifier clips earlier, generating distortion that can damage the driver.
- It is better to have a more powerful amplifier with a properly set limiter rather than an underpowered one.

2. LOAD IMPEDANCE: AMPLIFIER-SPEAKER COMPATIBILITY

Each amplifier has a range of impedance levels it can safely operate with.

- The amplifiers to driver the CP series must be designed to work at:
- 8Ω, 4Ω, and in some cases, 2Ω.
- Impedance changes with different speaker connections:
- Two 8Ω speakers in parallel → 4Ω total.
- Four 8Ω speakers in parallel → 2Ω total.
- Two 8Ω speakers in series → 16Ω total.

⚠ Warning: Using a load too low (e.g., 2Ω on an amplifier not designed for it) can overheat the system and activate protection circuits.

3. AMPLIFIER CLASS: WHICH ONE IS BEST FOR YOUR NEEDS?

Amplifiers are categorized by their operating class, affecting efficiency and sound performance.

- Class AB:
- Superior sound quality, suitable for Hi-Fi systems or recording studios.
- Higher heat dissipation and lower efficiency compared to other classes.
- Class D (recommended for PA and installations):
- High efficiency (90%+), lightweight, lower heat generation.
- Perfect for live sound, nightclubs, and fixed installations.

4. CONNECTIONS: CHECK COMPATIBILITY WITH YOUR AUDIO SYSTEM

- Inputs: The amplifier must be compatible with the audio source (Mixer, DSP, Controller).
- Balanced XLR: Best for long cables with no interference.
- TRS Jack/RCA: Used in less professional contexts.
- Speaker Outputs:
- Speakon (NL4): Professional standard for secure connections.
- Binding post: More versatile connections, commonly used in fixed installations.

5. COOLING AND RELIABILITY CONSIDERATIONS

An amplifier designed for live environments or nightclubs must guarantee thermal stability.

- Forced ventilation with temperature sensors → Smart cooling system.
- Aluminum heatsinks and efficient circuits → Longer lifespan.

Tip: Always leave space around amplifiers in racks to allow for proper heat dissipation.

Recommended Amplifiers

Model	AES Power	Peak Power	Ideal amplifier rating		Minimum rating	
	Rating	Rating	**4Ω**	**8Ω**	**4Ω**	**8Ω**
CP8	200W	560W	1200W	600W	600W	300W
CP10	300W	850W	1700W	850W	850W	425W
CP12	380W	1075W	2150W	1075W	1075W	540W
CP15	550W	1700W	3400W	1700W	1700W	850W

Connections

On the back of the speaker you have a connector panel has two Neutrik Speakon connectors wired in parallel with each other. The second connector allows use of a short link to drive another, parallel CP loudspeaker. The connectors are wired as follows:

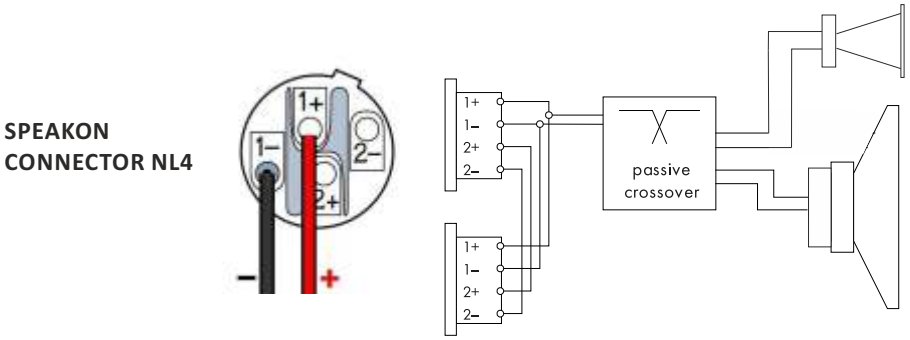

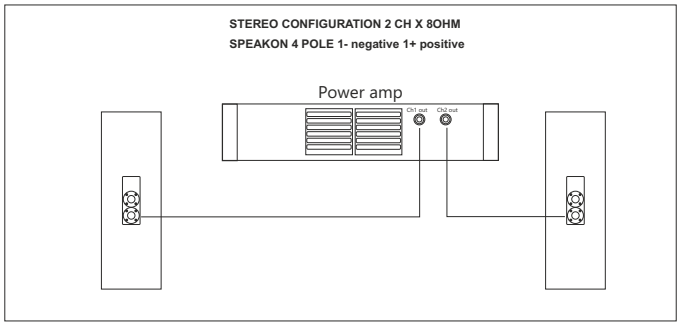

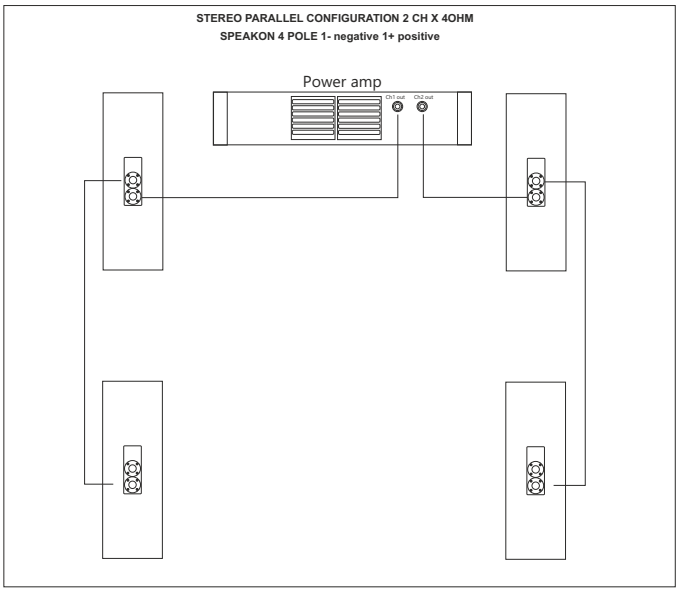

Cable lengths

Here you have a simple suggestion to wire cables systems to an amplifier, it is recommended that the return resistance of the cable used is less than one tenth of the nominal impedance of the system or systems in parallel. The table below gives an indication of the maximum permissible cable runs for various conductor cross-sectional areas.

Conductors	Maximum Cable Run		
	4 ohms	**8 ohms**	**16 ohms**
1.0mm²	11m	22m	44m
1.5mm²	17m	34m	68m
2.0mm²	22m	44m	88m
2.5mm²	29m	58m	116m
4.0mm²	44m	88m	176m
6.0mm²	66m	132m	264m

Frequency Response

CP8

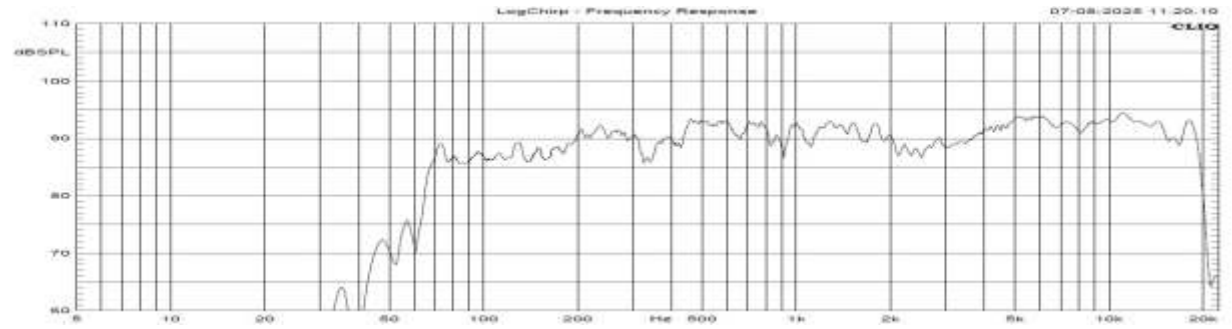

CP10

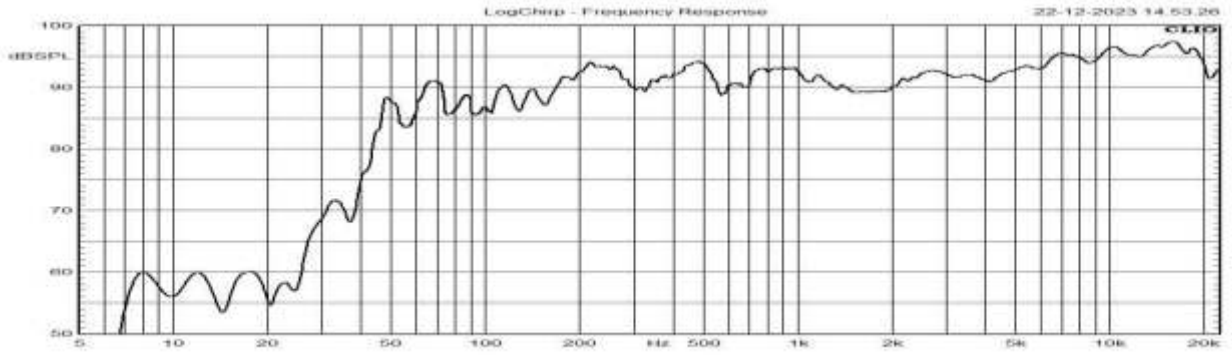

CP12



CP15

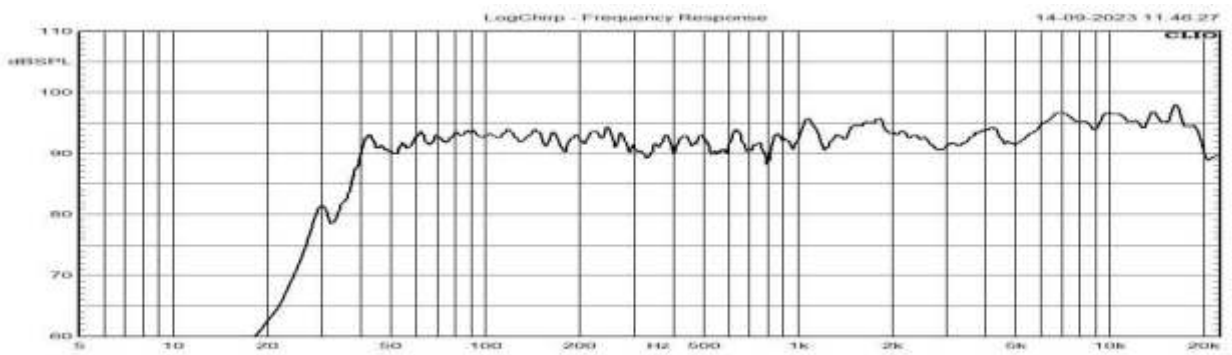

Warranty

This product is warranted by LSS for a period of twelve (12) months from the date of purchase under the terms and conditions of this warranty .The LSS covers material and manufacturing defects. The warranty comes into force only if the warranty certificate is fully and correctly completed by a LSS dealer.
The manufacturer's warranty does not cover:
- speakers
- damage resulting from improper handling , lack of care accidents or normal wear
- possible consequential damage resulting e.g. from defects , use , inaccurracy
- transport.

In case of defects covered by the warranty,your product will be repaired by LSS or authorized LSS dealer.
Any further claims against LSS e.g. compensation for damage, withdrawal from the purchase contract or refund of the purchase price are excluded. Your dealer carries responsability only for any other guarentees.
The warranty becomes void in the event of servicing or repair of the product by any person not duly authorized by LSS or its representatives.
The above manufacturer's warranty does not effect the purchaser's rights against the seller nor any other statutary rights the purchaser may have.

CE Declaration

The Manufacturer LSS Advanced Speakers Systems, whith office in viale degli Artigiani Zona PIP 89024 Polistena (RC) Italy

DECLARES
That the speakers of series CP
MODEL CP8
MODEL CP10
MODEL CP12
MODEL CP15
are compliant with essentials requirements according to relevant directive and designated standard:

LVD 2014/35/EU directive
- EN 62368-1:2014

RoHS 2011/65/EC directive

WEEE 2012/19/EC directive
- EN50419

Polistena, March 6 2023

Legal Rapresentation
(Giuseppe Laruffa)

CP

CLUB POWER SERIES

LSS engineering

All information is Copyright © 2025 LSS advanced speakers system

LSS Viale degli Artigiani - 89024 Polistena (RC) ITALY Tel. (39) 966 932199 Email: info@lss.it - www.lss.it